Preprints of the 19th World Congress
The International Federation of Automatic Control
Cape Town, South Africa. August 24-29, 2014

Pilot Plant Simulation as a Tool for More Efficient Mineral Processing

Pirjo Seppälä*. Aki Sorsa*. Marko Paavola*
Antti Remes. Jari Ruuska*. Kauko Leiviskä***

** University of Oulu, Control Engineering Laboratory, P.O.Box 4300*
FIN-90014 University of Oulu, Finland (e-mail: firstname.surname@oulu.fi).
*** Outotec Oyj, PO Box 84, FI-02201 Espoo, Finland*
(e-mail: firstname.surname@outotec.com)

Abstract: This paper describes a static flow sheet simulation model developed for the pilot scale mineral beneficiation plant taken recently into use at University of Oulu, Finland. The mini-pilot plant aims to serve as a research platform for students and researchers from universities, mining companies, and other organizations in the field of mining and mineral engineering. Currently, the mini-pilot plant is set up according to the concentrator plant at the Pyhäsalmi deposit but can be configured for different types of ores and beneficiation processes as well. The simulator is built using the HSC Sim® simulation software. The simulator will support research and development of the new mini-pilot line. It can also be used in process design and optimisation. This paper presents preliminary results demonstrating the promising potential of the simulation model for replicating the pilot process behaviour. The future aim is to convert the static model into dynamic operating mode and study different control scenarios of mineral beneficiation plants using the simulator.

Keywords: mini-pilot, mineral beneficiation, mineral enrichment, modelling, control

1. INTRODUCTION

The environmental and social impacts of mining are gaining increasing attention, especially in the sensitive arctic area. At the same time, the wellbeing of people is largely based on raw materials available in the soil and ground and the competition for available water and energy is becoming more intense. Effective utilisation of our mineral resources both secures the supply of raw materials and creates the prerequisites for balanced and sustainable regional development far into the future. Responses to these challenges require innovative technological developments throughout the entire extraction and production chain. This calls for improved technologies for increasing production efficiency while further reducing water, raw materials and energy usage.

Models can be used to improve efficiency and sustainability of mineral processing in many ways. They can be used, for example, in process research and development, design, optimization and control. Different kinds of models with different level of detail are used depending on the application (Roffel and Betlem 2006). Models can be classified according to their properties. If the model is time-dependent, it is dynamic while static (or steady-state) models do not depend on time. Dynamic models are typically represented as differential (or difference) equations. Mechanistic models are based on the actual or assumed mechanisms of studied phenomenon while empirical models are based on observations. Simulations based on either mechanistic or data-based models operating in steady-state or dynamic conditions have also been used commonly in mineral industry (Ruuska et al. 2012). For a brief list of mineral processing simulation programs refer to (Roine et al. 2011).

This paper describes the static model developed for the pilot scale mineral beneficiation plant taken recently into use at University of Oulu, Finland. This mini-pilot plant aims to serve as a research platform for students and researchers from universities, mining companies, and other organizations in the field of mining and mineral engineering. The research may focus on mineralogy, beneficiation processes, and chemical and physical phenomena. It can also be used to study flotation of different types of ores. A picture of the pilot scale beneficiation plant is shown in Fig. 1.

Currently the raw material used in the mini-pilot plant is sulphide ore mined from the Pyhäsalmi deposit in central Finland. The main minerals of the ore are chalcopyrite, pyrite, sphalerite, galena and quartz. Copper and zinc concentrates are produced through a process similar to the one used in Pyhäsalmi concentrator plant. The process includes a comminution circuit, copper and zinc flotation circuits and a dewatering unit. In flotation the same reagents are used as in the Pyhäsalmi plant. The two first processing stages, comminution and especially copper flotation circuit, are studied in this paper.

The model presented in this paper will assist in commissioning of the mini-pilot line in several ways. Together with the experimental work, it will serve in process start-up and operating characterisation of the new mini-pilot line. It can be used to simulate different operating conditions and alternatives giving important information considering process optimisation. Also operator decisions can be simulated and thus the plant can be operated in a more efficient manner. All these result in more efficient raw materials usage. In the future, dynamic mode of the mini-pilot simulator is to be used in designing control strategies for sustainable mineral processing. Previously a cell level control has been studied with a dynamic simulation in (Moilanen and Remes 2008). It is also possible that the dynamic simulator will be further integrated into training simulator system as has been done earlier in (Moilanen 2010) and (Roine et al. 2011). In these studies, the modelling and simulations were also carried out using HSC Sim® simulation software.

This paper is organised as follows. Section 2 describes the whole mini-pilot plant and the comminution and copper flotation circuits in more details. Section 3 continues by giving the theoretical background behind the model applied. Some illustrative results obtained with the simulator are presented in Section 4 while Section 5 concludes the paper and gives some future considerations.

Fig. 1. Pilot scale beneficiation plant.

2. PILOT SCALE BENEFICIATION PLANT

The mini-pilot plant includes the comminution section followed by two flotation sections and the dewatering unit. Only the comminution and copper flotation sections are studied here; the flow sheet of these processing steps are given in Fig. 2 and Fig. 3. The comminution circuit consists of a rod mill, a ball mill and a spiral. The flotation section contains a conditioner and 8 flotation banks with 4 cells in each unit. If it is necessary, regrinding is carried out before Zn scavenger cleaner (Fig. 3) and a tails thickener can also be utilised. Grinding and the copper ore circuits are described more detailed in the following subsections. These subsections also provide a short introduction for these processing steps.

2.1 Comminution Circuit

The general concept of comminution is that the economically valuable minerals are liberated from the less valuable side rocks. The first mechanical stage of comminution is crushing where particle size of ore is reduced and liberation of the minerals is started. Grinding and classification are the last processing stages in the comminution chain where particle size is reduced usually in the water suspension. Grinding can be done by several mechanisms and usually breakage is a combination of chipping, abrasion and impact or compression. Grinding is performed typically in tumbling cylindrical mills loaded with the grinding media. The grinding media can be balls, rods or rock itself. In the grinding stage, it is essential to control the particle size of the ground material. If ore is underground, it will be too coarse for flotation and leads to poor recovery. On the other hand, overgrinding is also an undesired outcome because it usually reduces also the particle size of the unwanted gangues which complicates the flotation, reduces material recovery and consumes energy excessively. (Wills and Napier-Munn 2006)

The structure of the grinding circuit used in the mini-pilot plant is quite usual in industry (Fig. 2). In the mini-pilot, the ore is fed into the rod mill which is in open circuit. The ball mill is in a closed circuit with the screw classifier that allows the particles of appropriate size to be fed to the flotation circuit. The sizes of the grinding mills are shown in Table 1. The first test runs with the plant were carried out by setting the ore and water feeds to the rod mill to 17 kg/h and 0.25 l/min, respectively. Water addition to the ball mill was set to 0.25 l/min. The aim is that the 80% of the particles fed to the flotation are smaller than 80 μm.

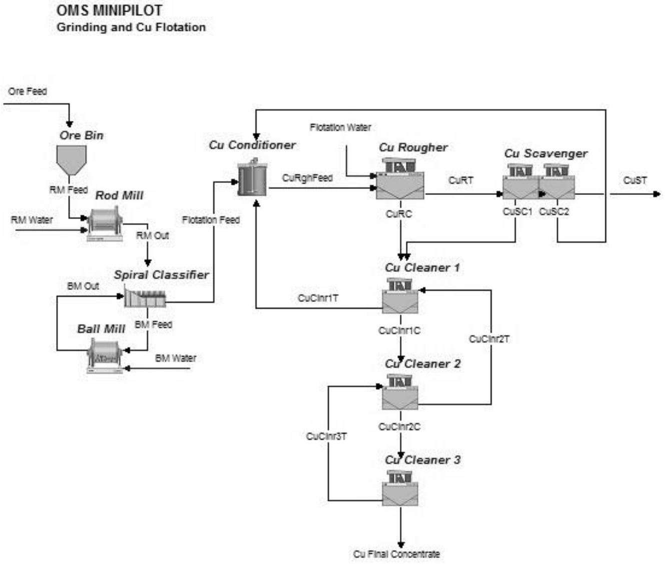

Fig. 2. The simulator of the comminution and copper flotation circuits.

Table 1. Technical information of the mini-pilot plant mills

Equipment	Rod mill	Ball mill	Regrinding mill
Outer diameter (mm)	550	530	200
Inner diameter (mm)	500	500	180
Length (mm)	635	635	250
Weight (kg)	480	436	68

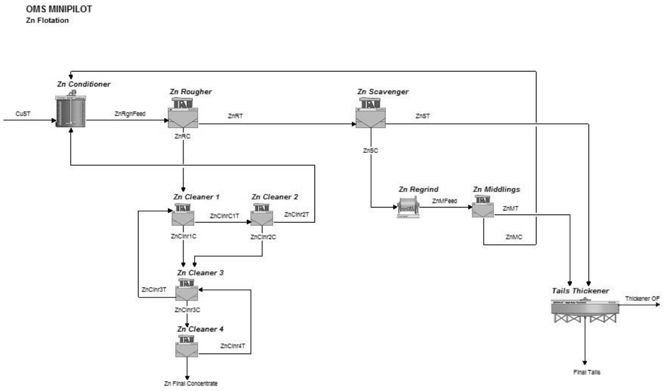

Fig. 3. The simulator of the zinc flotation circuit.

2.2 Flotation Circuit

The general concept of flotation is that the valuable mineral particles are recovered from slurry by attachment to air bubbles that lift the particles on the surface of the slurry. This can happen without chemicals if particles are hydrophobic or with chemicals if particles are hydrophilic. In the latter case, the surfaces of the particles are made hydrophobic by collectors. Air bubbles are dispersed through a rotor and their coalescence is prevented using the frothers. The hydrophobic conditions are obtained by using collectors. In addition, pH is controlled with regulating reagents. If the particle surface is not hydrophobic enough due to adding of the collector, the addition of another activating reagent may be needed. In the case of two valuable minerals depressants can be used to selectively separate them from the slurry. (Wills and Napier-Munn 2006)

Flotation as a process is complex and the phenomena in it occur in three different mechanisms:

- selective attachment to the air bubbles,
- entrainment in the water passing through the froth, and
- physical entrapment or aggregation between particles (Wills and Napier-Munn 2006).

The whole flotation process is not yet completely understood even though quite a lot is already known. The role of the bubbles is highly important in the flotation process and for example the effect of the frothers affecting on the bubble size has been studied by Grau et al. (2005). Moreover the models describing the generation of bubbles and froth performance has also been presented in (Wills and Napier-Munn 2006).

The flow sheet of the mini-pilot grinding section and the first flotation section (here: Cu flotation, when operated with the Pyhäsalmi ore) is given in Fig. 2. The flotation of Pyhäsalmi ore begins from the conditioner where all the chemicals (isobutylxanthate, zinc-sulphate and Dowfroth) are added and mixed. The flotation of copper occurs in alkaline conditions in pH 12 which is adjusted with lime. From the conditioner, the slurry mixture proceeds to the rougher flotation cells. In the rougher, as in all the flotation cells, the air is pumped to the bottom of a cell through the rotor. Fine copper particles are attached to the upwards rising air bubbles. From the rougher, concentrate flowing over the cell lip is fed into the cleaners (3 stages) and tailing to the first scavenger. From each cleaning stage, the tailings are fed back to previous stage. Hence, the cleaners' tails are finally circulated back to the rougher conditioner. The concentrate streams continue to the next cleaner until the final concentrate is obtained from the final cleaner. From the second scavenger, concentrate is fed back to the conditioner as well and tailings are pumped further to the next (Zn) flotation section. The details of the equipment in the mini-pilot plant are given in Table 2 and the zinc flotation section is shown in Fig. 3.

Table 2. Technical information of the mini-pilot plant mills

Unit	Number of cells	Volume (l)	Effective Volume (l)	Bank inner area dimensions (m)
Cu roughers	4	4	16	0.717 x 0.13
Cu Scavengers	4	4	16	0.717 x 0.13
Cu Cleaner 1	2	4	8	0.359 x 0.13
Cu Cleaner 2	2	2	4	0.26 x 0.115
Cu Cleaner 3	2	2	4	0.26 x 0.115
Zn roughers	4	4	16	0.717 x 0.13
Zn Scavengers	4	4	16	0.717 x 0.13
Zn Middlings	2	4	8	0.359 x 0.13
Zn Cleaners	2	2	4	0.26 x 0.115

3. SIMULATOR DEVELOPMENT

The (copper-zinc) ore of Pyhäsalmi deposit was run in the mini-pilot plant and the obtained data was used as a background for setting up a static simulation model. The simulation model was built with HSC Sim® 7.1 simulation software. In the developed model all the units of mini-pilot plant were drawn into a flow sheet and calculation models were chosen and parameterized for each unit. The parameters of the unit models were based on the mini-pilot plant equipment sizing, operating parameters and ore mineralogy. The grinding and the copper ore circuits are described in more details below and shown in Fig. 2.

Size reduction in grinding is modelled simply by using Rosin-Rammler size distribution formula: (Wills and Napier-Munn 2006)

$$W_R = 100\exp\left(-\left(\frac{x}{a}\right)^b\right), \tag{1}$$

where W_R is the weight-% of particles retained and x is the particle size. The calibration parameters are a (slope) and b (size where 36.8% of the particles are retained).

The Whiten efficiency curve is applied for the classifier: (Napier-Munn et al. 2005)

$$Eff = \left(1 - R_f\right)\left(\frac{\exp(\alpha) - 1}{\exp\left(\varepsilon \dfrac{d}{d_{50c}}\right) - \exp(\alpha) - 2}\right), \tag{2}$$

where R_f is the bypass factor, d is the particle size, d_{50c} is the corrected cut size and α is the separation efficiency parameter.

The flotation model was set up with a three component model having fast floating, slow floating, and non-floating components for each mineral. The recovery R of a mineral is calculated using (Wills and Napier-Munn 2006)

$$R = m_f \frac{k_F}{1 + k_F t} + m_s \frac{k_s}{1 + k_s t} + 0 \cdot m_n , \tag{3}$$

where k is the kinetic flow rate constant (1/min), t is the residence time (min), m is a mass fraction of a floatability component. Subscripts F, S and N stand for the aforementioned floatability components (fast, slow and non-floating, correspondingly). The average cell residence time t is calculated based on the effective cell size V (m^3) given by

$$t = \frac{V}{Q} . \tag{4}$$

The kinetic flotation factor of a mineral is obtained from mineral floatability P and bubble surface area flux S_b (1/min): (Gorain et al. 1999)

$$k = PS_b . \tag{5}$$

S_b is calculated using superficial gas velocity J_g and bubble Sauter diameter d_{32}: (Gorain et al. 1999)

$$S_b = \frac{6J_g}{d_{32}} . \tag{6}$$

Instead of constant bubble Sauter diameters, the bubble sizes were defined as a function of superficial gas velocity (Grau et al. 2005). The flow rate of water Q_w to the concentrate stream is obtained from (Wills and Napier-Munn 2006)

$$Q_w = aQ_s^b , \tag{7}$$

where Q_s is the solids flow rate, and a and b are constants. In defining the effective volume of a cell, the gas hold-up is also taken into account. Here it was still parameterized as a function of superficial gas velocity (Dahlke et al. 2005).

The model was simplified by neglecting the froth recovery and particle entrainment terms and assuming them to be lumped in the overall kinetic equation of recovery given in (2). The details of the model can be further refined when more experimental data is available.

The parameters of the grinding section were calibrated based on the laboratory sieving results carried out at University of Oulu. The kinetic parameters for chalcopyrite recovery in (3) were set based on earlier laboratory tests carried out for Pyhäsalmi ore.

4. RESULTS

The simulator for the pilot scale beneficiation plant was built as described in the previous section. The simulator is shown in Fig. 2. It was calibrated for the mini-pilot equipment (Tables 1 and 2) using the pilot plant data having the same operating targets as at the Pyhäsalmi mine copper circuit. The full scale plant and the minipilot plant operation correlates reasonably as shown in Fig. 4 which presents the copper grade measured in the Pyhäsalmi site together with the corresponding values obtained with the simulator. Furher, the minipilot plant tests run data can be utilised to parameterise the simulation model in more details. On the other hand, also the simulation model can be used for seeking the bottlenecks in minipilot operation to be able to reproduce the plant operation more accurate.

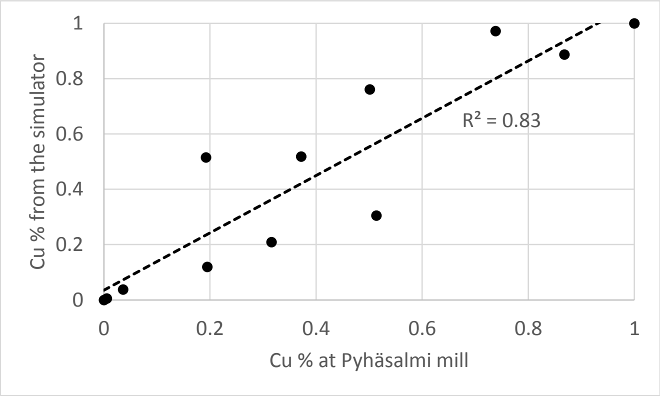

Fig. 4. Copper grade computed with the simulator as a function of the copper grade measured at Pyhäsalmi mill. Copper grade presented in scaled units.

To be able to improve and optimise the minipilot plant operation, dependencies of key process variables need to be known. This section shows results where the interactions between the main process variables are studied through simulations. The results are illustrated as response surfaces. They can be used for process optimisation and when designing future process pilot test works.

Table 3 shows the process operating parameters used in the simulations. The simulations were carried out by varying the solids feed rate between 15 and 30 kg /h. The other manipulated variable was the water fed to the rod mill (RM water), to finally vary the flotation feed slurry density. It was adjusted so that the slurry density (SG) of the slurry in the rod mill varies between 1.2 and 1.4 kg/l. These limits are based on process knowledge. The output variables that were recorded were the copper grade (Cu wt%) and recovery (Cu Rec%) in the final concentrate. Fig. 5 shows the interdependence between copper grade and recovery. The overall well known trend is that the higher grade leads to lower recovery. When considering the influence of the manipulated input variables, increased solids feed increases copper grade but decreases recovery, since the residence time in flotation decreases. On the other hand, increased slurry density increased both copper grade and recovery. According to this, higher slurry density is preferred. It cannot be, however, increased too much for practical issues. Therefore, this result needs to be still verified in a pilot scale and by further detailing the model by including froth recovery and entrainment parameterization based on the pilot results.

Table 3. The experiments run with the simulator.

Solids feed rate (kg/h)	RM water (kg/h)	Slurry density (kg/l)
15	0.85	1.2
15	0.55	1.3
15	0.4	1.4
20	1.15	1.2
20	0.75	1.3
20	0.54	1.4
25	1.45	1.2
25	0.95	1.3
25	0.68	1.4
30	1.75	1.2
30	1.12	1.3
30	0.82	1.4

The response surfaces of copper grade and recovery are shown in Figs. 6 and 7. The response surfaces are informative when considering the sensitivity of an output variable to certain input variables. For example, the gradient of the surface in Fig. 6 gives direct information about the gain between solids feed rate and Cu w% with certain slurry density. This information is very useful when designing controllers for the process. The response surfaces can also be used in process optimisation.

The results shown here are still preliminary, due to on-going mini-pilot plant sampling and subsequent fine tuning of the operation. However, the simulator seems to be valuable in providing insight to the process that is partly quite difficult to measure. Even though the simulated results must be used and analysed with great care they may reveal valuable information that otherwise cannot be found. The simulator also serves as a suitable platform for process development and process design. The design of controllers becomes even more feasible when the simulator will be converted into dynamic calculation mode as a next step of the mini-pilot modelling and simulation development.

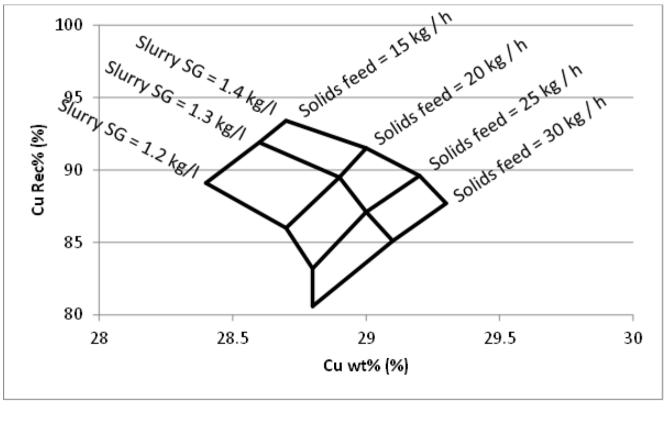

Fig. 5. Copper recovery as a function of copper grade in the final concentrate.

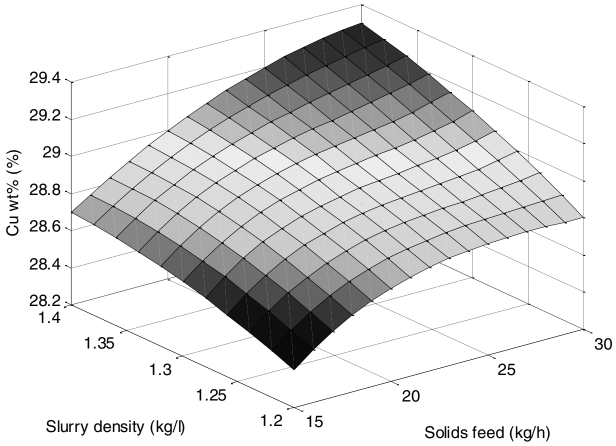

Fig. 6. The response surface of the copper grade.

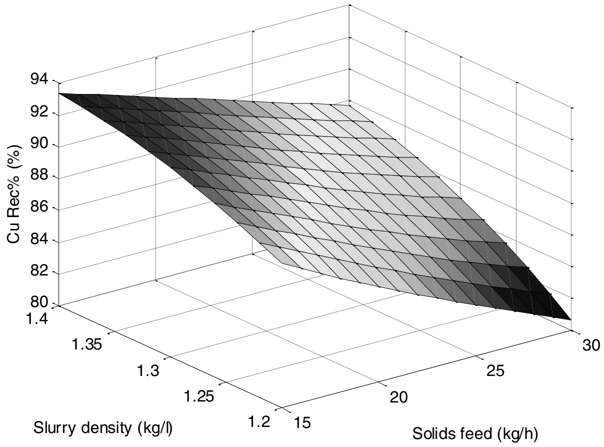

Fig. 7. The response surface of the copper recovery.

5. CONCLUSIONS AND FUTURE WORK

This paper introduced the pilot scale beneficiation plant implemented in University of Oulu, Finland. The mini-pilot plant serves as a research platform for researchers and students from universities, mining companies and other organisations in the field of mining and mineral engineering. The pilot plant includes the grinding circuit together with two flotation circuits and the dewatering unit. The simulation model was built for the mini-pilot plant with Outotec HSC Sim® software to support research, process design and optimisation and control design. A static simulation model of the mini-pilot, operated with the Pyhäsalmi Mine ore, was set up. The simulation results shown in this paper were illustrative but clearly highlighted the great potential of the simulator in characterising the process behaviour and supporting the above mentioned development tasks. Based on the current results, a dynamic version of the simulator has been developed in order to further study different control scenarios addressing especially efficiency and sustainability of mineral beneficiation plants.

REFERENCES

Coleman, R., and Lamberg, P. (2010). Flotation circuit optimisation using modelling and simulation software. *Outotec Australia's quarterly e-newsletter*, Issue 26 – August 2010.

Dahlke, R., Gomez, C., and Finch, J.A. (2005). Operating range of a flotation cell determined from gas holdup vs. gas rate. *Minerals Engineering*, 18, 977-980.

Gorain, B.K., Franzidis, J.P. and Manlapig. E.V. (1999). The empirical prediction of bubble surface area flux in mechanical flotation cells from cell design and operating data. *Minerals Engineering*, 12, 309-322.

Grau, R., Laskowski, J., and Heiskanen, K. (2005). Effect of frothers on bubble size. *International Journal of Minerals Processing*, 76, 225-233.

Moilanen, J. and Lamberg, P. (2010). Minerals processing simulator for operator training. In Alatalo, J. (ed.) *Conference in Minerals Engineering*, 12p.

Moilanen, J. and Remes, A. (2008). Control of the flotation process. In Casali, A., Gómez, C. and Kuyvenhoven, R. (eds.), *Proceedings of the V International Mineral Processing Seminar (Procemin 2008)*, 318-325.

Napier-Munn, T.J., Morrell, S., Morrison, R.D. and Kojovic, T. (2005). Mineral comminution circuits: Their operation and optimisation. Julius Kruttschmitt Mineral Research Centre, Australia.

Roffel, B., and Betlem, B.H. (2006). *Process dynamics and control: Modeling for control and prediction*. John Wiley & Sons, Chichester, UK.

Roine, T., Kaartinen, J., and Lamberg, P. (2011). Training simulator for flotation process operators. Paper presented at the *IFAC Proceedings Volumes* (*IFAC-PapersOnline*), 18(PART 1), 12138-12143.

Ruuska, J., Lamberg, P., and Leiviskä, K. (2012). Flotation model based on floatability component approach - PGE minerals case. Paper presented at the *IFAC Proceedings Volumes* (*IFAC-PapersOnline*), 19-24.

Wills, B.A., and Napier-Munn, T.J. (2006). Will's Mineral Processing Technology: an introduction to the practical aspects of ore treatment and mineral recovery. Elsevier/Butterworth-Heinemann, Oxford, UK.